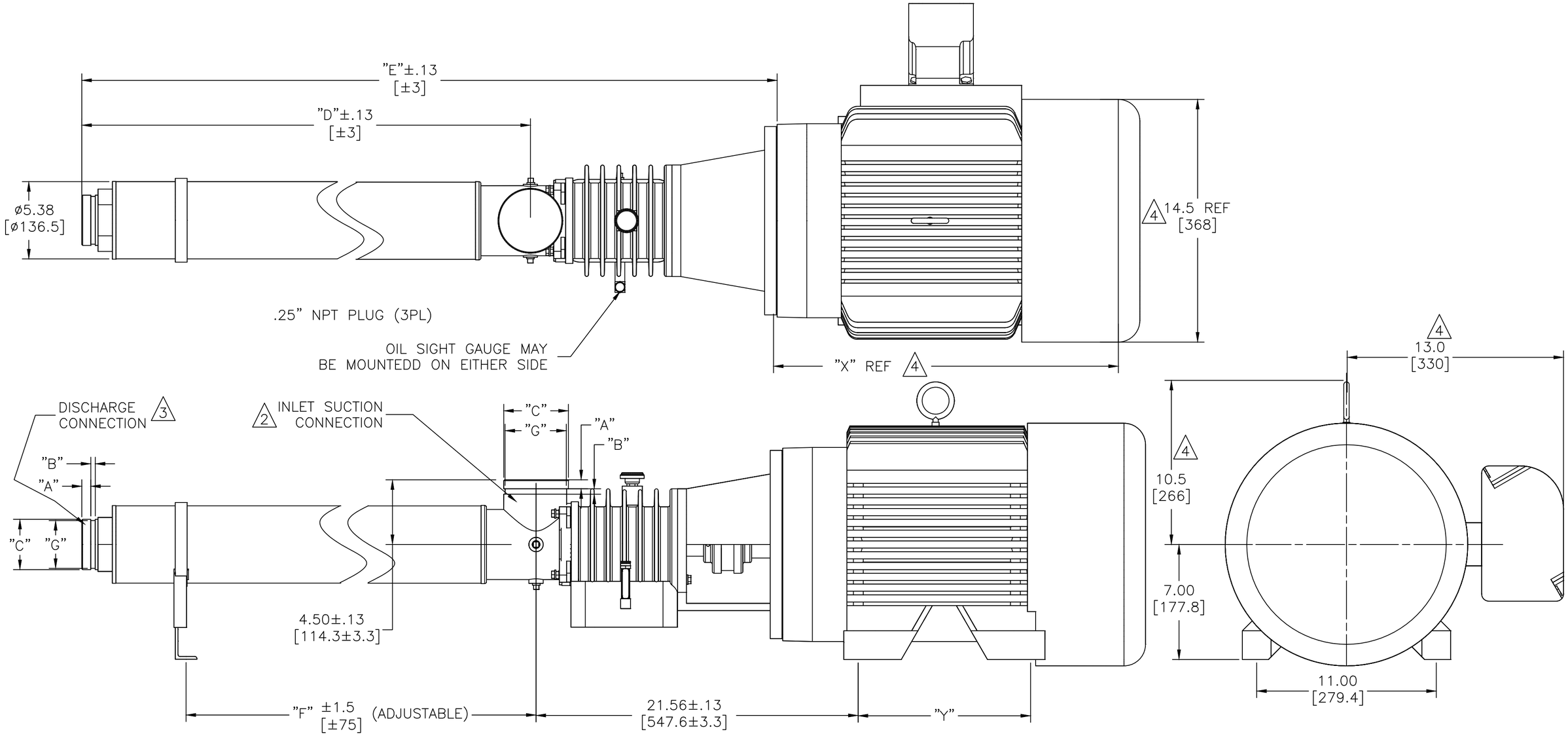

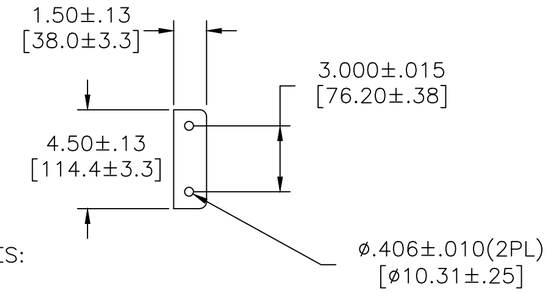

MODELS		"D"		"E"		"F"	
60HZ	50HZ	INCHES	[MM]	INCHES	[MM]	INCHES	[MM]
SS24004KC		21.58	548	38.11	968	16.58	421
SS24006KC	SS24006KC	33.28	845	49.81	1265	27.28	692
	SS24007KC	39.13	993	55.66	1414	33.13	841

VICTAULIC® DIMENSIONS STANDARD 3" DISCHARGE CONNECTIONS		
ITEM	INCHES	MILLIMETERS
"A"	.625±.031	15.88±.78
"B"	.312±.031	7.94±.78
"C"	3.500±.031	88.90±.78
"G"	$3.344^{+.000}_{-.018}$	$84.94^{+.00}_{-.46}$

VICTAULIC® DIMENSIONS STANDARD 4" INLET CONNECTIONS		
ITEM	INCHES	MILLIMETERS
"A"	.625±.031	15.88±.78
"B"	.375±.031	9.53±.78
"C"	4.500±.031	114.30±.78
"G"	$4.334^{+.000}_{-.020}$	$110.08^{+.00}_{-.51}$

MOTOR SIZE	"X"		"Y"	
	INCHES	[MM]	INCHES	[MM]
284TSC	22.06	560	9.50	241
286TSC	23.56	598	11.00	279

NOTES:

1. DIMENSIONS ARE IN INCHES [MILLIMETERS].
2. PUMP INLET CONNECTIONS MATE WITH 4-INCH VICTAULIC TYPE CLAMPED UNIONS PUMP INLET MAY BE ROTATED IN 90° INCREMENTS.
3. PUMP DISCHARGE CONNECTIONS MATE WITH 3-INCH VICTAULIC TYPE CLAMPED UNION
4. TEFC MARATHON 284TSC MOTOR SHOWN, MOTOR DIMENSIONS WILL VARY WITH MANUFACTURER AND ARE SHOWN FOR REFERENCE ONLY.
5. PUMP AND MOTOR ADAPTER WILL ACCEPT NEMA 284/286TSC FRAMES 3450 RPM ELECTRIC MOTOR AND A WOODS FLEXIBLE COUPLING WITH THE END OF THE PUMP DRIVE SHAFT. THE 284/286TSC FRAME MOTORS MUST HAVE A BASE AND BE RIGIDLY MOUNTED. MOUNTING OF BEARING FRAME BASE IN A STRAIN-FREE MANNER IS OPTIONAL WITH 284/286TSC FRAME MOTORS.
6. SEE PUMP INSTRUCTIONS P/N 1125314 FOR ADDITIONAL INFORMATION ON INSTALLATION, STARTUP, AND MAINTENANCE.

REV	DESCRIPTION	ECO	DWN	APPR	APPR	DATE
D	VEOLIA REBRANDING	140586	HP	NL	NL	09 Jan 23
C	SUEZ REBRANDING	131562	TG	SR	MS	20 Sep 18
B	REDRAWN ON ACAD	3334	PFM	MJT	-	23 Jun 98
A	RELEASED PER ECO	1743	CBH	EMW	-	27 Jun 96

PROPRIETARY AND CONFIDENTIAL: THIS DRAWING AND ALL INFORMATION AND KNOWLEDGE CONTAINED OR REFERRED HEREIN ARE THE CONFIDENTIAL AND PROPRIETARY PROPERTY OF VEOLIA AND AS SUCH ARE INSTRUMENTS OF SERVICE FOR USE SOLELY WITH RESPECT TO THIS PROJECT. THESE INSTRUMENTS OF SERVICE SHALL NOT BE REPRODUCED, TRANSMITTED, DISCLOSED OR USED OTHERWISE IN WHOLE OR IN PART, WITHOUT PRIOR WRITTEN AGREEMENT BY VEOLIA AND MUST BE IMMEDIATELY RETURNED OR DESTROYED UPON REQUEST.

TOLERANCES UNLESS NOTED
DECIMALS .X .1 .XX .03 .XXX .010
ANGLES 2° FRAC

VEOLIA

CUSTOMER INFORMATION

DWG, TF, OUTLINE

SS24000KC, 284/286TSC NEMA MOTOR

DRAWING NUMBER: 1125289
REVISION: D
REF.: -
DOC. OWNER: -
PROJECT NO.
PART/MATERIAL NO.
SCALE: 3/16" = 1"
SIZE: C
SHEET: 1 OF 1

LAST SAVED: Thursday, January 5, 2023 10:48:18 AM

FILE LOCATION: C:_ADSKVault\SYSTEMS-IFO MIGRATED\IFO\1100000\1125289.dwg